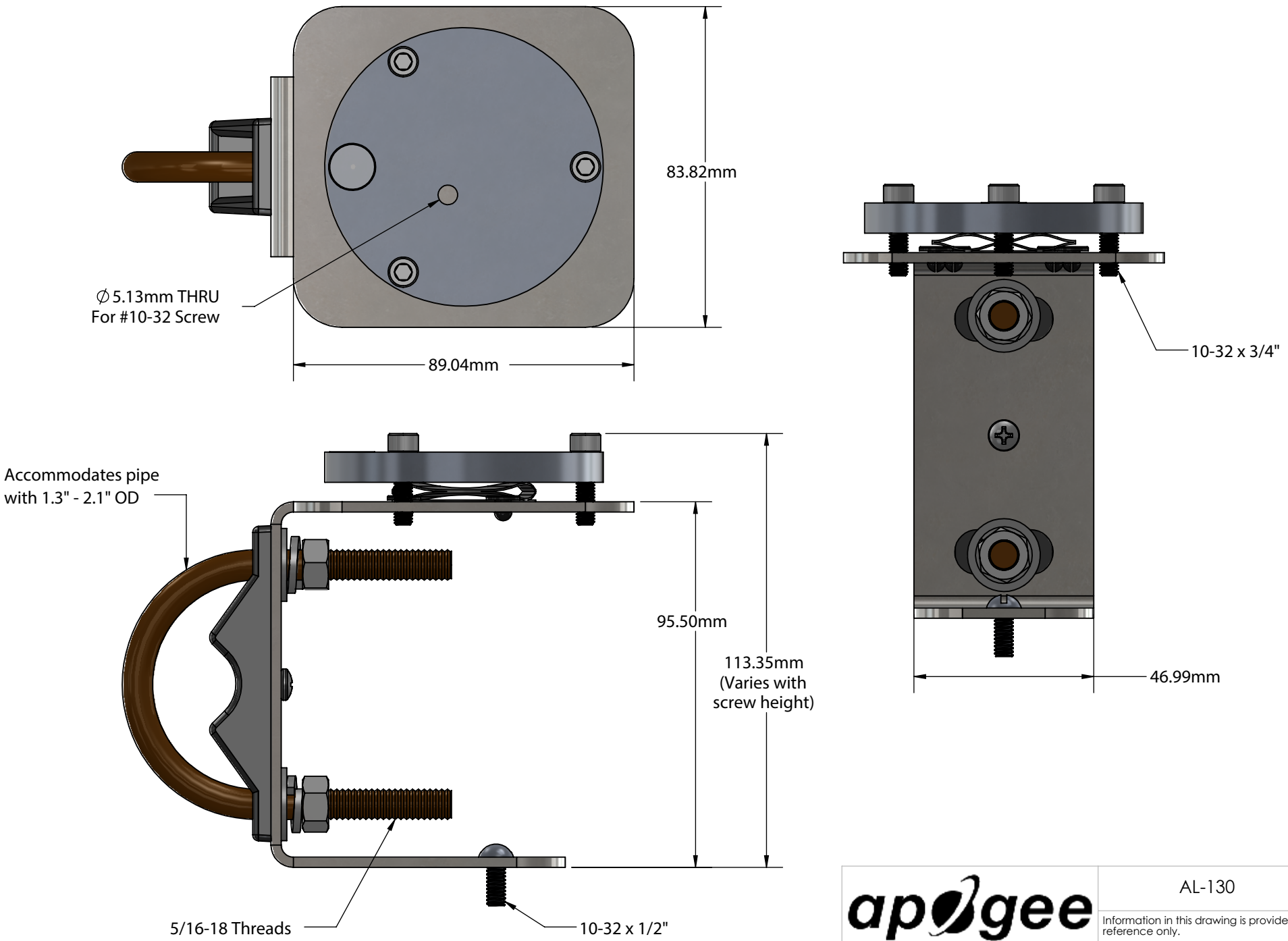

apogee INSTRUMENTS

AL-130

Information in this drawing is provided for reference only.

SCALE: 3:4